WaterMark

DWV BEND 50mm M&F PIPE SIZE SOCKET
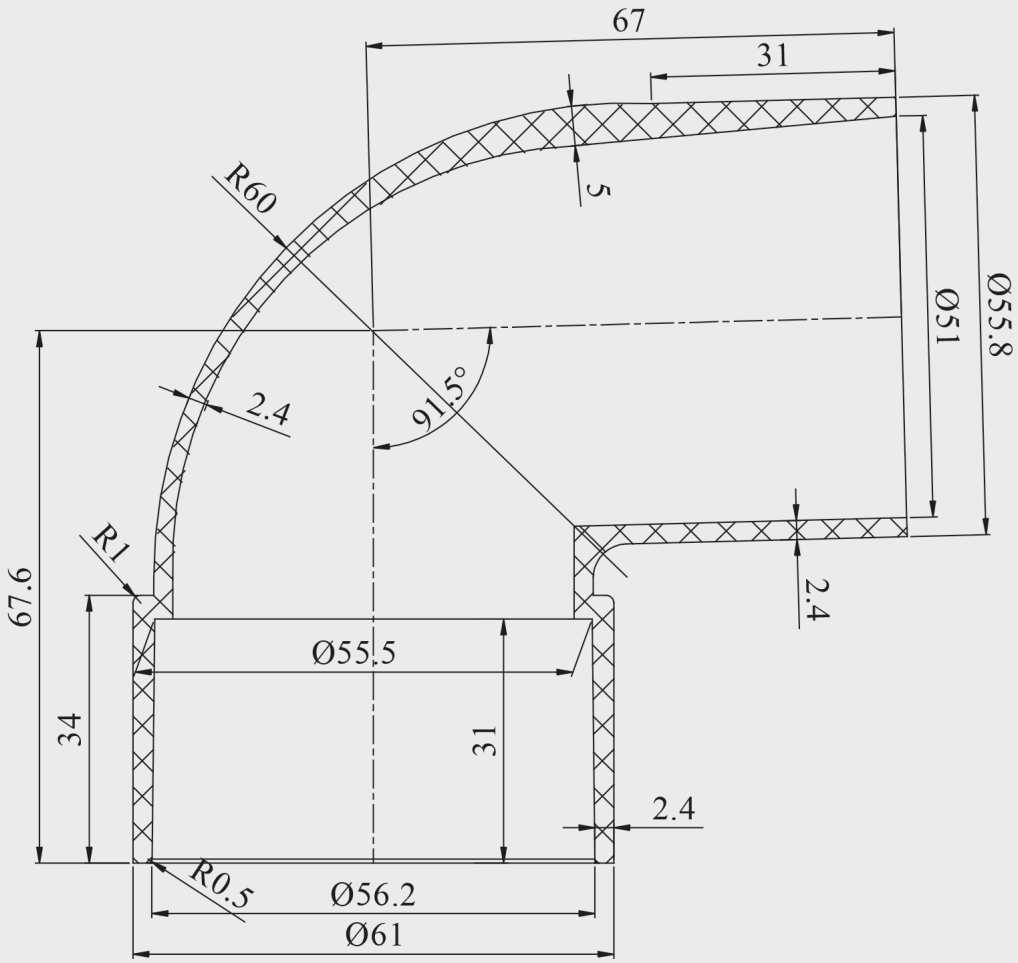
CODE	OUTLET SIZE	FINISH	CARTON QTY
31104	50mm	PVC	120